D-SUB Metal Hood

Variable cable entries – 9-50 pos. – Jack screws

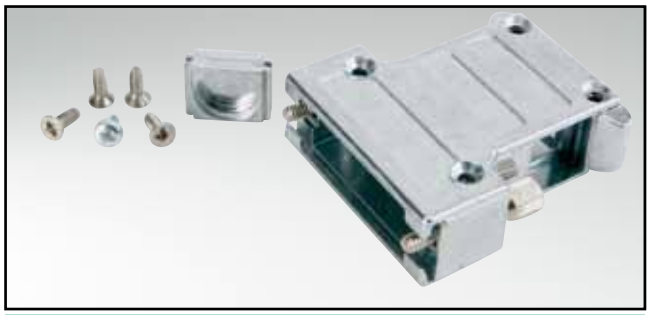

RoHS compliant – CSA listed, File No.: LR 115000-1 – UL listed, File No.: E202784

Description

- Zinc die-cast hood, EMI/RFI shielding
- Two designs:
  - Type 1: 1.575"/40 mm height
  - Type 2: 2.165"/55 mm height
- Delivery includes: Hood, blanking plugs, screws for assembly grounding screws, 4-40 UNC jack screws
- Cable clamp must be ordered separately
- Crimp fitting and crimp tool please contact factory
- Bulk or single packaged units
- M3 thread design for jack screws available on request

Product drawing

Type 1: max. installation height 42 mm

9-15 pos.

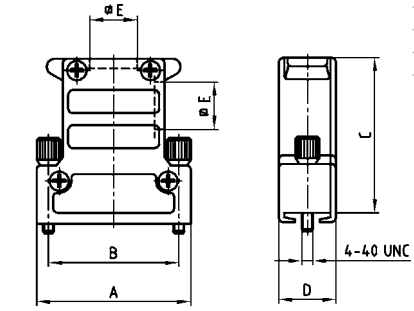

No. of pos.	A	B	Dim. C (Type 1)	Dim. C (Type 2)	D	Ø E
09	31.00	25.00	35.50	50.50	14.80	12.10
15	39.40	33.30	40.00	55.00	14.80	12.10
25	53.20	47.04	40.00	55.00	14.80	12.10
37	69.60	63.50	40.00	55.00	14.80	12.10
50	67.00	61.10	42.00	57.00	17.80	14.60

Type 2: max. Installation height 57 mm

9-15 pos.

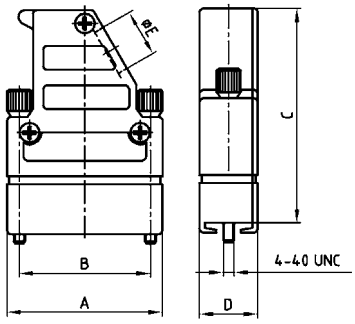

25-50 pos.

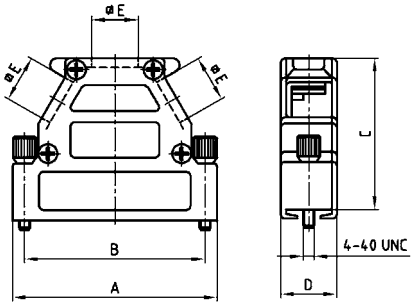

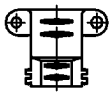

Cable clamp

25-50 pos.

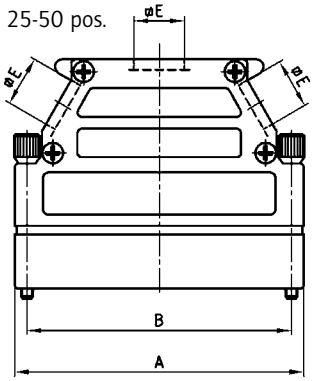

Order data

D-SUB Metal hood – Variable cable entries – jack screw – Type 1

No. of pos.	Design	Part Number
09	Housing/One straight cable entry	165 X 11609 X
15	Housing/One straight/One side cable entry	165 X 11619 X
25	Housing/Three cable entries	165 X 11629 X
37	Housing/Three cable entries	165 X 11639 X
50	Housing/Three cable entries	165 X 11649 X
09-37	Cable clamp	160 X 11189 X
50	Cable clamp	160 X 11199 X

D-SUB Metal hood – Variable cable entries – jack screw – Type 2

No. of pos.	Design	Part Number
09	Housing/One side cable entry	165 X 14409 X
15	Housing/One side cable entry	165 X 14419 X
25	Housing/Three cable entries	165 X 14429 X
37	Housing/Three cable entries	165 X 14439 X
50	Housing/Three cable entries	165 X 14449 X
09-37	Cable clamp	160 X 11189 X
50	Cable clamp	160 X 11199 X

For single packaged add the letter „E" at the end of the part number.